ZHT Group s.r.o.
ZABRANSKY HIGH TECHNOLOGY

NEW PRODUCT !

FLOATING PUMP
Amphibio Remote

Floating pump AMPHIBIO REMOTE with REMOTE CONTROL for comfortable control of the pump from the shore.

Ideal solution for pumping water from natural sources.

Efficient helper for FIREFIGHTERS and wherever a rapid intervention and pumping of water is required (municipal services, forests, buildings, construction companies).

USE FOR:

Amphibio pumps are used for filling water tenders, drainage of flooded areas and extinguishing fires.

Helping those who help others

www.zht.cz

ZHT Group s.r.o.
ZABRANSKY HIGH TECHNOLOGY

REMOTE, ELECTRIC OR MANUAL START

The pump can now be started more easily by remote control or by electric start on pump or by manual start as backup starting system.

NEW CONSTRUCTION FOR HIGH PERFORMANCE

Due to the perfectly tuned combination of pressure and flow rate Amphibio Remote provides such high performance that it allows for the pump to be used for extinguishing fires.

INTEGRATED FUEL TANK

The pump is now fitted with a larger fuel tank with volume of 6 L which allows the pump to run for more than 3 hours of continuous operation.

NEW ERGONOMIC DESIGN

The new superb design allows for better ergonomics of the float and introduces four handles for easier manipulation. The shape and compact dimensions of the float enable better stowage and higher stability on water surface.

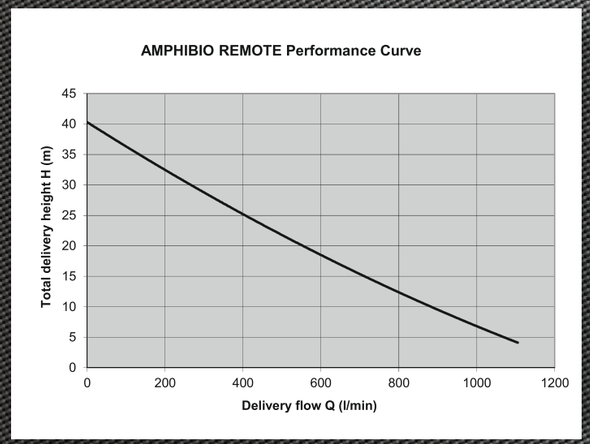

REMOTE CONTROL

The remote-control function greatly simplifies the deployment of the pump during fire-fighting intervention:

Simply place the pump on water surface and press the START BUTTON ON THE REMOTE CONTROL to start operation

Prevention from getting dirt stuck in the pump from shallow waters of natural sources

To finish operation just press the STOP BUTTON ON THE REMOTE CONTROL making it easier to remove the pump from water surface

When filling up water tenders the operator can stand by the fire truck and remotely control the pump by pressing START and STOP buttons on his remote control.

Practical armband for remote control

ZABRANSKY HIGH TECHNOLOGY

ZHT Group s.r.o.
ZABRANSKY HIGH TECHNOLOGY

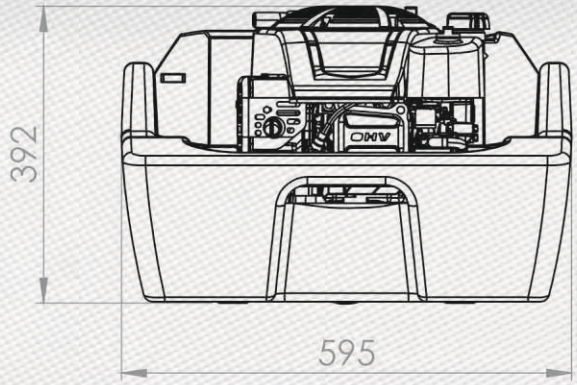

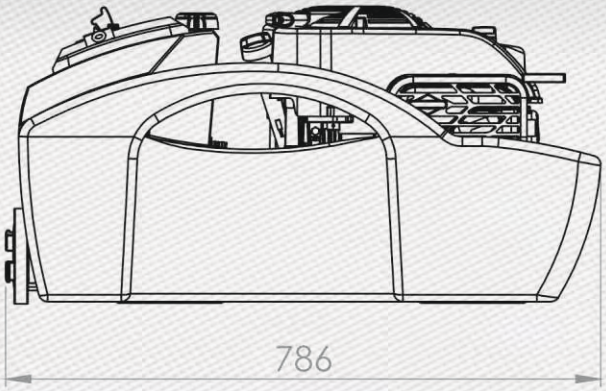

PARAMETERS	
Nominal max. output	1150 LPM
Nominal max. pressure	4,3 bar
Pumping head	Up to 43 m of water column
Outlet diameter	65 mm / B75
Min. suction depth	15 mm
Engine	Briggs and Stratton
Starting system	Remote, electric or manual
Tank capacity	6 L
Operation time at full fuel tank	More than 3 hours
Weight	Dry 30 kg / Operation 36,5 kg
Dimensions	786 x 595 x 392 mm

ZHT Group s.r.o., Slavíč 119, 753 61 Hranice, Czech Republic

www.zht.cz